CITY OF COOS BAY CITY COUNCIL
Agenda Staff Report

MEETING DATE	AGENDA ITEM NUMBER
June 21, 2016	

TO: Mayor Shoji and City Councilors

FROM: Jessica Spann, Engineering Services Coordinator

THROUGH: Rodger Craddock, City Manager
Jim Hossley, Public Works Director

ISSUE: Award of Contract to Billeter Marine, LLC for the N 4th Street Storm Sewer Improvement Project

BACKGROUND:

There is an old brick lined storm sewer manhole and wooden line (approximately 260 feet) that is aligned along N 4th Street from Commercial Avenue to Central Avenue that has failed. The 260 foot long segment is a 10" by 17" wooden box culvert that has several locations in which it has failed. The failed line is located under a major thoroughfare that experiences high traffic volumes. In addition, the system is tidally influenced. Because of these challenges, staff deemed this project an emergency and contracted with HGE, Inc. to prepare plans, specifications and to perform bidding and construction management services for this project. The request for bid was advertised April 19, 2016 and the bids were opened on May 31st, 2016 at 2:00 pm. A total of four bids were received:

BIDDER	AMOUNT
Billeter Marine, LLC	$124,212.72
Johnson Rock Products	$164,144
Knife River Materials	$170,654
Benny Hempstead Excavation, Inc.	$172,385

Contractors were asked to provide bids on two alternatives, "A" and "B". Alternate Bid A allows for the potential for a 12-inch PVC pipe to be installed instead of the 15-inch pipe in the Base Bid with the elimination of one Storm Sewer Manhole with the 8-inch sanitary sewer pass-through pipe. This option will be determined once the area is excavated and inspected by the City.

Alternate Bid B is to construct a new Storm Sewer Manhole at 4th Street and Central Avenue instead of retaining existing manhole and reconnecting and reconstructing existing base and flow channels. The City will determine if this option is necessary once the area is excavated and exposed.

ADVANTAGES:

This section of storm sewer has already caused one major sinkhole that required immediate action and is in such a deteriorated condition that it cannot be safely televised. If Council approves the award of this contract, the City can complete the project and repair a badly damaged storm sewer box culvert thus preventing any further damage to the streets and adjacent utilities.

DISADVANTAGES:

Staff sees no disadvantages.

BUDGET IMPLICATIONS:

The source of funds for this contract is the Fund 29, Wastewater Improvement Fund Department 810, and Wastewater Emergency (29-810-530-3010). The base bid amount is for $124,212.72, the amount for Alternate B is $7,500. The total maximum bid cost is $131,712.72. Because of other potential subsurface unknowns, staff recommends a 15% contingency of $19,757 for a total amount of $151,470.

ACTION REQUESTED:

If it pleases the City Council, award the Contract to Billeter Marine, LLC. for the N 4th Street Storm Sewer Improvement Project for an amount not to exceed $151,470 without prior approval from Council.

ATTACHMENTS

Bid Tabulation Form
Plan Sheets

City of Coos Bay

N. 4th Street Storm Sewer Improvements; City Project 160071; HGE Project 15.60

Bid Tabulation (Bid Opening May 31, 2016)

				Engineer's Estimate		Billeter Marine, LLC		Benny Hempstead Exc. Inc.	
	Bid Item	Units	Quantity	*Unit Cost*	*Item Cost*	Unit Cost	Item Cost	Unit Cost	Item Cost
1	Mobilization	L.S.	1	*$11,500*	*$11,500*	$6,532.77	$6,532.77	$22,750.00	$22,750.00
2	Traffic Control	L.S.	1	*$6,000*	*$6,000*	$200.00	$200.00	$6,500.00	$6,500.00
3	Bypass Pumping	L.S.	1	*$4,000*	*$4,000*	$250.00	$250.00	$4,000.00	$4,000.00
4	Excavation Dewatering	L.S.	1	*$4,500*	*$4,500*	$200.00	$200.00	$900.00	$900.00
5	Demolition	L.S.	1	*$4,000*	*$4,000*	$300.00	$300.00	$5,200.00	$5,200.00
6	15" ASTM D3034 PVC piping, bedding, pipe zone, CLSM backfill, installed	L.F.	260	*$160*	*$41,600*	$267.91	$69,656.60	$235.00	$61,100.00
7	8" ASTM D3034 PVC piping, bedding, pipe zone, CLSM backfill, installed (catch basin pipe reconnects)	L.F.	60	*$100*	*$6,000*	$86.27	$5,176.20	$41.00	$2,460.00
8	Storm Sewer Lateral reconnects	EA.	5	*$2,000*	*$10,000*	$600.00	$3,000.00	$845.00	$4,225.00
9	48" precast concrete storm sewer manhole, frame, cover, penetrations, aggregate base, installed	EA.	2	*$6,000*	*$12,000*	$5,159.46	$10,318.92	$11,200.00	$22,400.00
10	48" precast concrete storm sewer manhole with 8" D.I.P. sanitary sewer pass-through pipe; frame, cover, penetrations, aggregate base, installed	EA.	1	*$10,000*	*$10,000*	$5,252.06	$5,252.06	$11,150.00	$11,150.00
11	New Frame and Cover for existing Storm Manhole	EA.	1	*$1,000*	*$1,000*	$231.75	$231.75	$600.00	$600.00
12	Core-Drill, Pipe Connections to Existing Manholes with flow channel modification	EA.	2	*$2,000*	*$4,000*	$859.21	$1,718.42	$825.00	$1,650.00
13	Asphalt Pavement, 8-inch thick	TON	80	*$130*	*$10,400*	$168.00	$13,440.00	$170.00	$13,600.00
14	Additional Excav., CLSM fill for sinkhole repair outside normal trench area	C.Y.	20	*$150*	*$3,000*	$145.00	$2,900.00	$240.00	$4,800.00
15	Foundation Stabilization	C.Y.	40	*$50*	*$2,000*	$38.40	$1,536.00	$95.00	$3,800.00
16	Thermoplastic Striping	L.S.	1	*$2,000*	*$2,000*	$500.00	$500.00	$6,000.00	$6,000.00
17	Compaction Tests	EA.	5	*$300*	*$1,500*	$600.00	$3,000.00	$250.00	$1,250.00
	Total Base Bid				*$133,500*		$124,212.72		$172,385.00
6	Alternate Bid A - 12" Pipe	L.F.	260			$242.75	$63,115.00	$223.00	$57,980.00
9a	Alternate Bid B - New 48" Storm MH	E.A.	1			$7,500.00	$7,500.00	$13,275.00	$13,275.00
							Apparent Low Bidder		Highest Bid

City of Coos Bay

N. 4th Street Storm Sewer Improvements; City Project 160071; HGE Project 15.60

Bid Tabulation (Bid Opening May 31, 2016)

				Johnson Rock Products		Knife River Materials		Average of Bids	
	Bid Item	Units	Quantity	Unit Cost	Item Cost	Unit Cost	Item Cost	Unit Cost	Item Cost
1	Mobilization	L.S.	1	$4,550.00	$4,550.00	$11,300.00	$11,300.00	$11,283.19	$11,283.19
2	Traffic Control	L.S.	1	$6,400.00	$6,400.00	$3,800.00	$3,800.00	$4,225.00	$4,225.00
3	Bypass Pumping	L.S.	1	$2,250.00	$2,250.00	$3,600.00	$3,600.00	$2,525.00	$2,525.00
4	Excavation Dewatering	L.S.	1	$2,560.00	$2,560.00	$3,600.00	$3,600.00	$1,815.00	$1,815.00
5	Demolition	L.S.	1	$6,440.00	$6,440.00	$9,600.00	$9,600.00	$5,385.00	$5,385.00
6	15" ASTM D3034 PVC piping, bedding, pipe zone, CLSM backfill, installed	L.F.	260	$309.50	$80,470.00	$220.00	$57,200.00	$258.10	$67,106.65
7	8" ASTM D3034 PVC piping, bedding, pipe zone, CLSM backfill, installed (catch basin pipe reconnects)	L.F.	60	$170.25	$10,215.00	$252.00	$15,120.00	$137.38	$8,242.80
8	Storm Sewer Lateral reconnects	EA.	5	$754.60	$3,773.00	$290.00	$1,450.00	$622.40	$3,112.00
9	48" precast concrete storm sewer manhole, frame, cover, penetrations, aggregate base, installed	EA.	2	$7,677.00	$15,354.00	$9,900.00	$19,800.00	$8,484.12	$16,968.23
10	48" precast concrete storm sewer manhole with 8" D.I.P. sanitary sewer pass-through pipe; frame, cover, penetrations, aggregate base, installed	EA.	1	$9,516.00	$9,516.00	$10,400.00	$10,400.00	$9,079.52	$9,079.52
11	New Frame and Cover for existing Storm Manhole	EA.	1	$719.00	$719.00	$3,400.00	$3,400.00	$1,237.69	$1,237.69
12	Core-Drill, Pipe Connections to Existing Manholes with flow channel modification	EA.	2	$505.00	$1,010.00	$1,672.00	$3,344.00	$965.30	$1,930.61
13	Asphalt Pavement, 8-inch thick	TON	80	$147.90	$11,832.00	$170.00	$13,600.00	$163.98	$13,118.00
14	Additional Excav., CLSM fill for sinkhole repair outside normal trench area	C.Y.	20	$177.00	$3,540.00	$192.00	$3,840.00	$188.50	$3,770.00
15	Foundation Stabilization	C.Y.	40	$57.25	$2,290.00	$105.00	$4,200.00	$73.91	$2,956.50
16	Thermoplastic Striping	L.S.	1	$1,950.00	$1,950.00	$5,150.00	$5,150.00	$3,400.00	$3,400.00
17	Compaction Tests	EA.	5	$255.00	$1,275.00	$250.00	$1,250.00	$338.75	$1,693.75
	Total Base Bid				**$164,144.00**		**$170,654.00**		**$157,848.93**
6	Alternate Bid A - 12" Pipe	L.F.	260	$303.70	$78,962.00	$213.00	$55,380.00	$245.61	$63,859.25
9a	Alternate Bid B - New 48" Storm MH	E.A.	1	$8,300.00	$8,300.00	$10,000.00	$10,000.00	$9,768.75	$9,768.75
					Second Lowest Bid				Average

City of Coos Bay

Coos County, Oregon

Contract Documents

For the Construction of

N. 4th Street Storm Sewer improvements

March 2016

Volume 2 – Project Drawings

City Project # 160071

HGE Project # 15.60

HGE, Inc. • 375 Park Ave • Coos Bay, Oregon 97420 • www.hge1.com

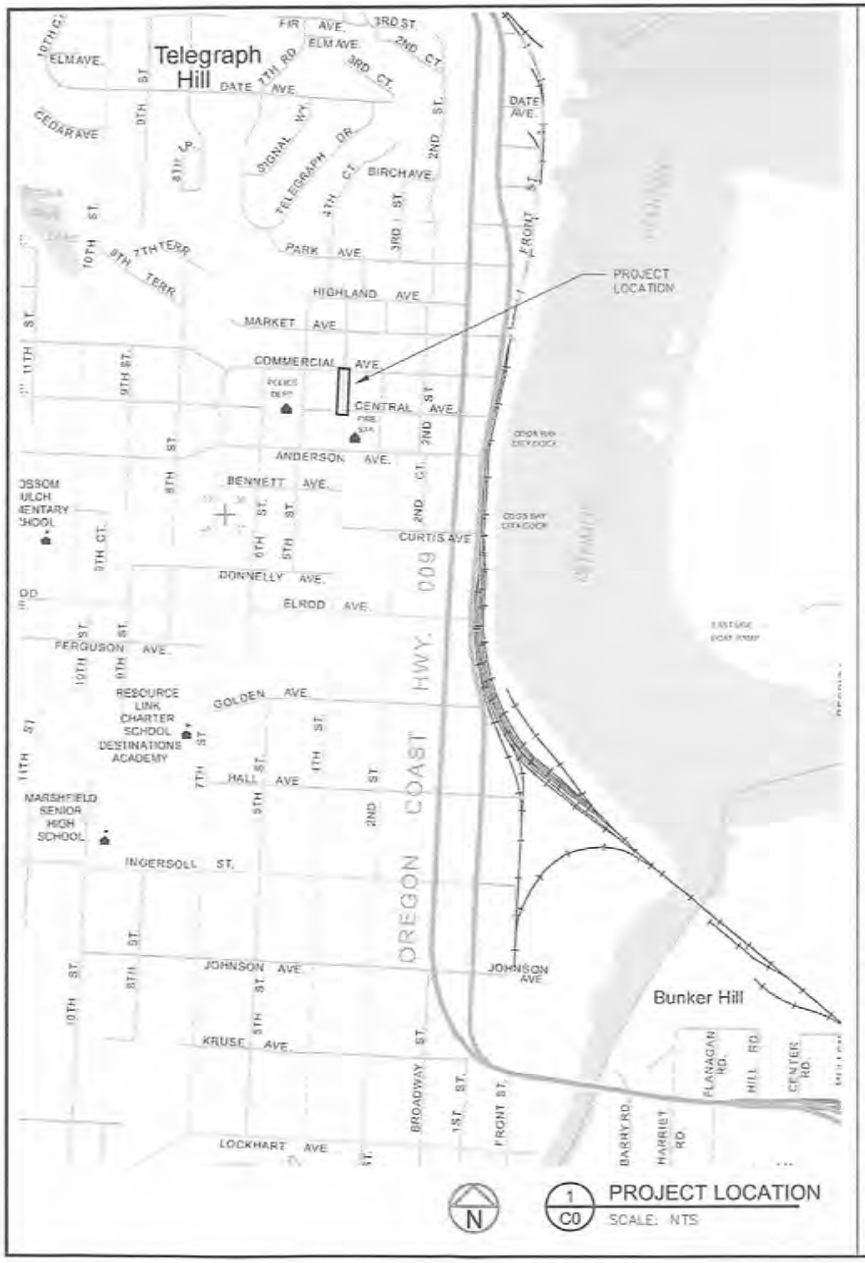

CITY OF COOS BAY

N. 4th Street Storm Sewer Improvements

City Project No. 160071
HGE Project No. 15.60

SHEET
C0 - COVER
C1 - STORM SEWER PLAN AND PROFILE (15" PIPE)
C1.1 - STORM SEWER PLAN AND PROFILE - ALTERNATE BID (12" PIPE)
C2 - STORM MANHOLE INSTALLATION STA. 2+52
D1 - STANDARD DETAILS, TRENCH, LATERALS
D2 - STANDARD DETAILS, MANHOLES
D3 - STANDARD DETAILS, STORM MANHOLE COVER

TRAFFIC CONTROL:
ONE-WAY TRAFFIC AT MINIMUM MUST BE MAINTAINED TO ALLOW ACCESS TO BUSINESS. PROVIDE FLAGGING, CONES, WARNING SIGNS, AND TEMP. FENCING AS REQUIRED AND DIRECTED. FOLLOW ODOT MANUAL FOR TRAFFIC CONTROL. PRIOR NOTIFICATION AND COORDINATION WITH PROPERTY OWNERS SHALL BE CONTRACTOR'S RESPONSIBILITY AND IS REQUIRED BEFORE DISRUPTING DRIVEWAY ACCESS. SUBMIT TRAFFIC CONTROL PLAN FOR APPROVAL PRIOR TO THE COMMENCEMENT OF WORK.

STAGING:
CONTRACTOR SHALL STAGE WORK AND MATERIALS TO MINIMIZE DISRUPTION TO BUSINESS, TRAFFIC, AND PEDESTRIANS. SUBMIT STAGING PLAN. ONLY APPROVED AREAS WILL BE ALLOWED FOR STAGING.

EROSION CONTROL:
CONTRACTOR SHALL PROVIDE PROPER EROSION CONTROL AND RUNOFF PROTECTION. CATCH BASINS SHALL BE SURROUNDED BY EROSION CONTROL FILTER SOCKS AND SHALL BE CLEANED AND MAINTAINED DURING THE PROJECT. IN ADDITION, FABRIC CATCH BASIN INSERTS SHALL BE INSTALLED TO PREVENT DEBRIS AND SEDIMENT FROM ENTERING THE SYSTEM. STREETS SHALL BE KEPT SWEPT AND AS CLEAN AS PRACTICAL DURING CONSTRUCTION. SEDIMENT LADEN RUNOFF SHALL BE PREVENTED FROM EXITING CONSTRUCTION AREA OR ENTERING STORM SEWERS OR SANITARY SEWERS, DITCHES, AND CATCH BASINS. ADDITIONAL ABSORPTION LOGS SHALL BE PLACED ALONG GUTTERS AND SEDIMENT CONTROL GRAVEL BAGS USED AS REQ'D. ADHERE TO DEQ RULES AND BEST PRACTICES (BMP) REGARDING EROSION CONTROL. SUBMIT PLANNED EROSION CONTROL PROCEDURES FOR APPROVAL. CONTRACTOR IS RESPONSIBLE TO PROPERLY PROTECT SITE AND ADJACENT SITES FROM EROSION AND RUNOFF AND TO COMPLY WITH ALL APPLICABLE RULES AND REGULATIONS.

REGISTERED PROFESSIONAL ENGINEER
17804PE
OREGON
JULY 25, 1995
ROBERT E. BYNUM
RENEWS: 12/31/17

HGE INC
ARCHITECTS ENGINEERS & PLANNERS
375 PARK AVE COOS BAY, OR 97420
541.269.1166 www.hge1.com

REPRODUCTION OF THESE DRAWINGS, IN WHOLE OR IN PART, FOR ANY PURPOSE WITHOUT PRIOR WRITTEN PERMISSION IS STRICTLY PROHIBITED.

REV.	DATE	DESCRIPTION	BY

Designed By: REB | Drawn By: REB | Checked By: SRC
Project No: 15.60

CITY OF COOS BAY
COOS COUNTY, OREGON

N. 4TH STREET
STORM SEWER IMPROVEMENTS

COVER SHEET
LOCATION MAP, SHEET INDES, NOTES

Sheet No. C0
Date 3/21/2016

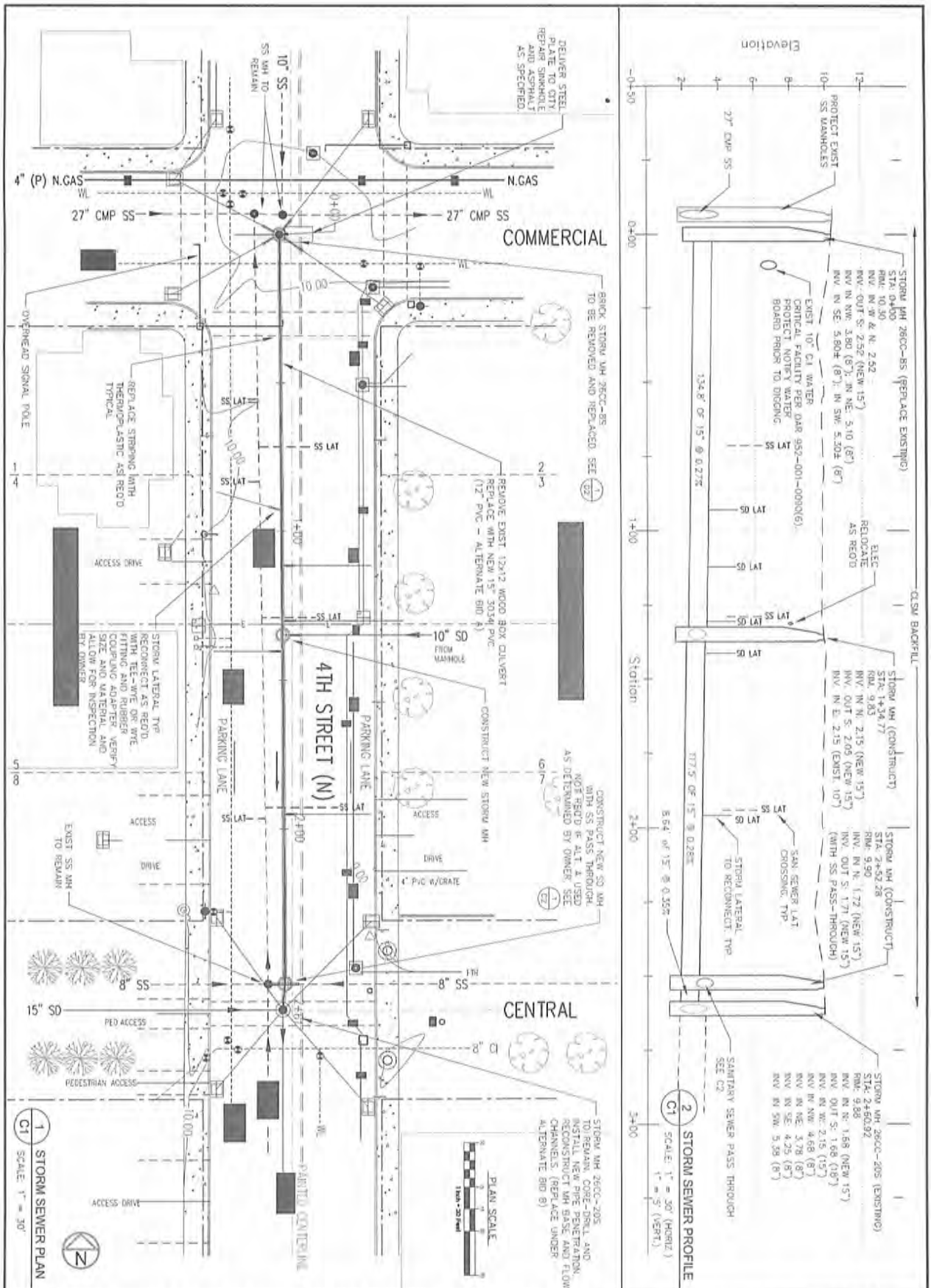

Date	Sheet No.	CITY OF COOS BAY COOS COUNTY, OREGON	REV.	DATE	DESCRIPTION	BY
3/21/2016	C1	N. 4TH STREET STORM SEWER IMPROVEMENTS				
		NEW STORM SEWER PLAN AND PROFILE				

Designed By: RES | Drawn By: RES | Checked By: SRC

Project No. 15/60

HGE INC ARCHITECTS ENGINEERS & PLANNERS
375 PARK AVE. COOS BAY, OR 97420
541.269.1166 www.hge1.com

REPRODUCTION OF THESE DRAWINGS EITHER IN WHOLE OR IN PART, FOR ANY REASON WITHOUT PRIOR WRITTEN PERMISSION, IS STRICTLY PROHIBITED.

REGISTERED PROFESSIONAL ENGINEER 17804PE OREGON JULY 25, 1995 ROBERT E. BYNUM

RENEWS: 12/31/17

Agenda Item #8

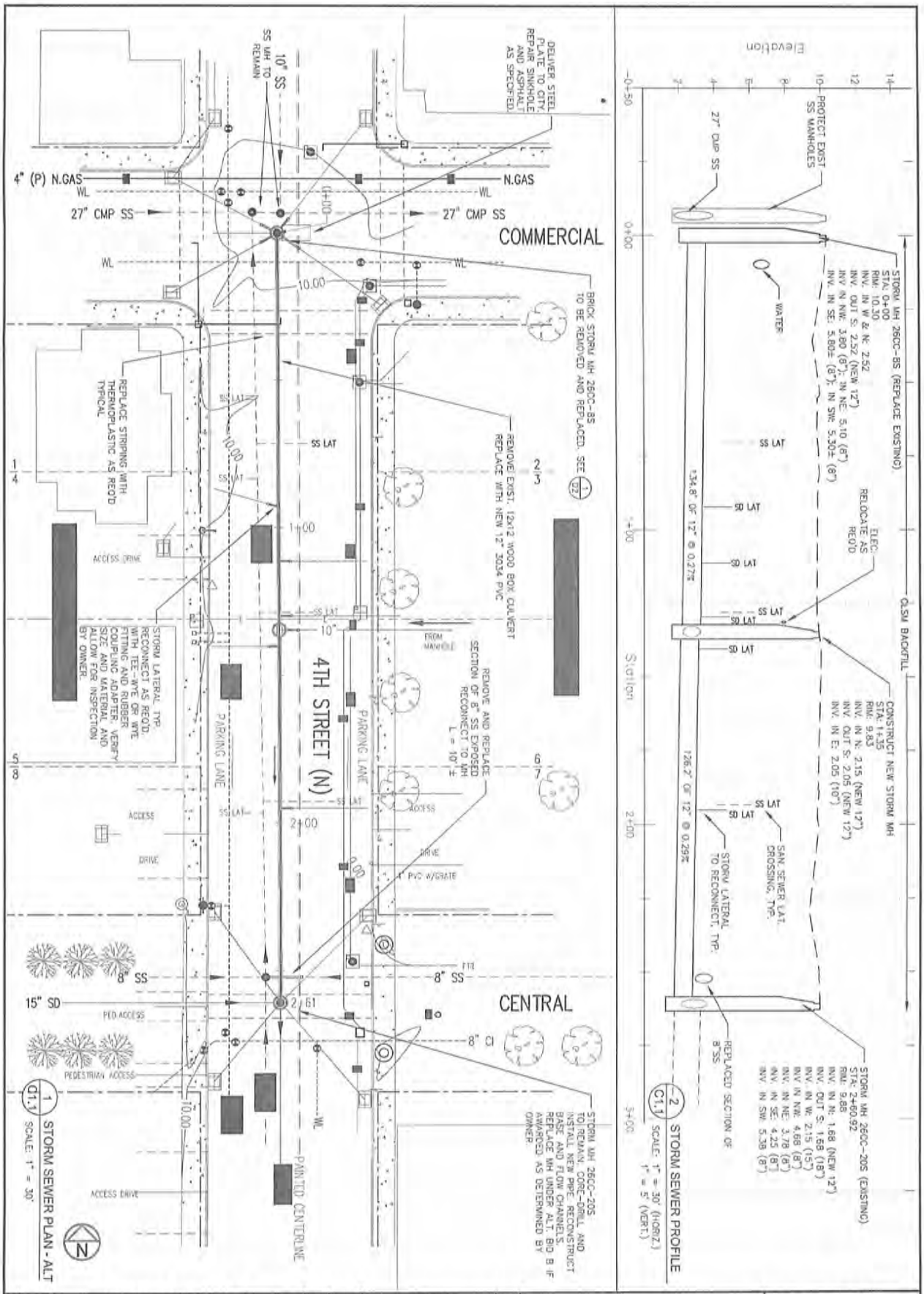

Date	Sheet No.	CITY OF COOS BAY COOS COUNTY, OREGON	REV.	DATE	DESCRIPTION	BY
3/21/2016	C1.1	STORM SEWER IMPROVEMENTS 4TH ST. - COMMERCIAL TO CENTRAL				
		NEW STORM DRAIN - ALTERNATE BID A PLAN AND PROFILE				

Designed By: REB | Drawn By: REB | Checked By: SRC
Project No: 15.63

HGE INC
ARCHITECTS ENGINEERS & PLANNERS
375 PARK AVE. COOS BAY, OR 97420
541.269.1166 www.hge1.com

REPRODUCTION OF THESE DRAWINGS EITHER IN WHOLE OR IN PART FOR ANY REASON WITHOUT PRIOR WRITTEN PERMISSION IS STRICTLY PROHIBITED.

RENEWS: 12/31/17

REGISTERED PROFESSIONAL ENGINEER
17804PE
OREGON
JULY 25, 1995
ROBERT E. BYNUM

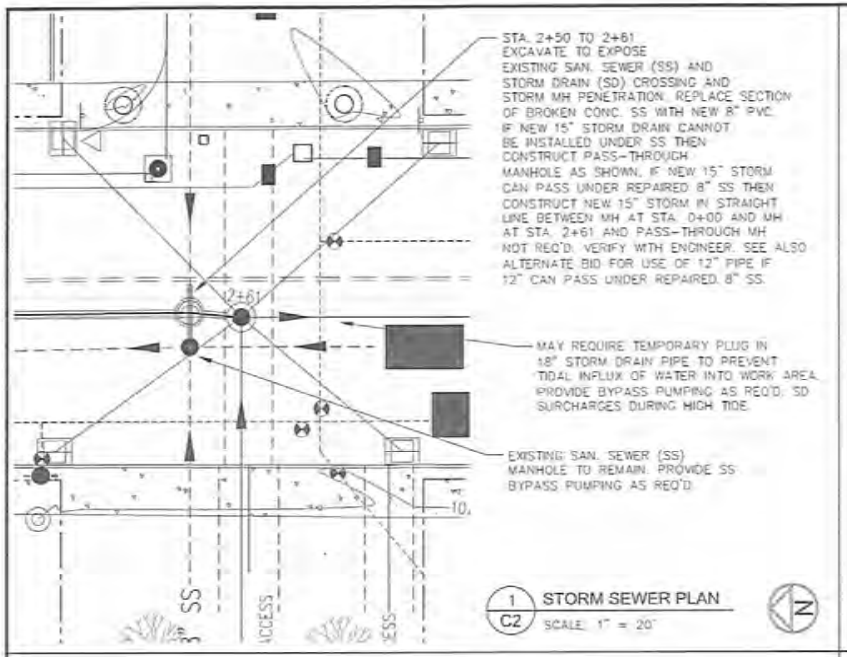

1 C2 STORM SEWER PLAN
SCALE: 1" = 20'

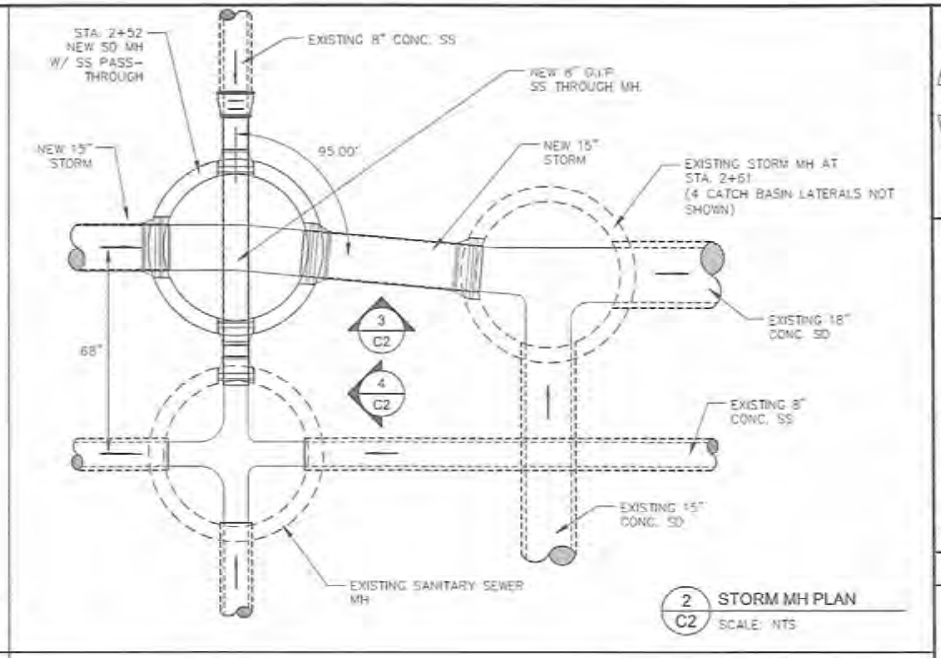

2 C2 STORM MH PLAN
SCALE: NTS

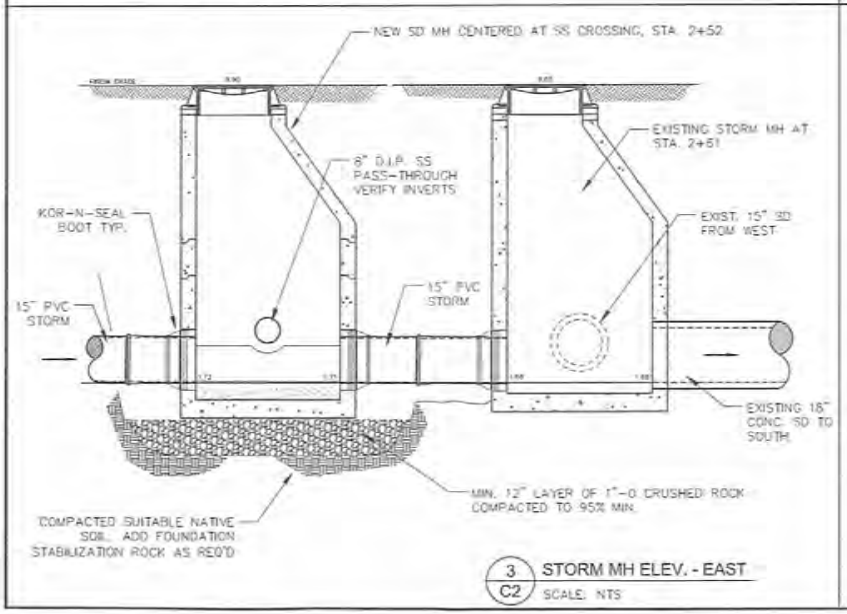

3 C2 STORM MH ELEV. - EAST
SCALE: NTS

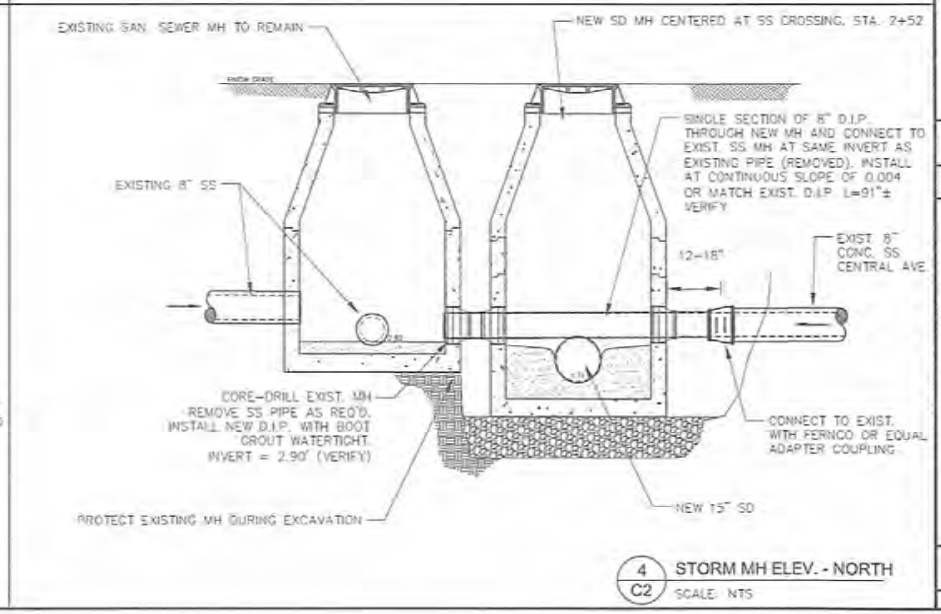

4 C2 STORM MH ELEV. - NORTH
SCALE: NTS

REGISTERED PROFESSIONAL ENGINEER
17804PE
OREGON
JULY 25, 1995
ROBERT E. BYNUM
RENEWS: 12/31/17

HGE INC
ARCHITECTS
ENGINEERS
& PLANNERS
375 PARK AVE. COOS BAY, OR 97420
541.269.1166 www.hge1.com

REV	DATE	DESCRIPTION	BY

Designed By: AES Drawn By: REB Checked By: SRC
Project No.: 15.00

CITY OF COOS BAY
COOS COUNTY, OREGON

N. 4TH STREET
STORM SEWER IMPROVEMENTS

NEW STORM SEWER
MH INSTALLATION AT STA. 2+52

C2
3/21/2016

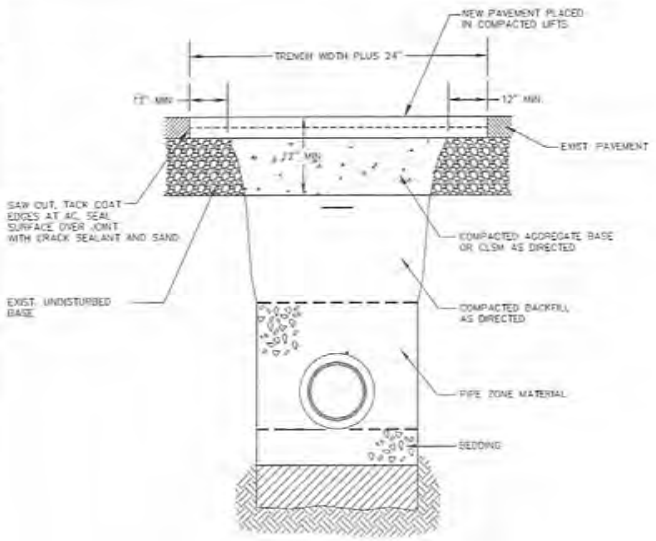

NOTES:

1. ALL EXISTING AC OR PCC PAVEMENT SHALL BE SAWCUT IMMEDIATELY PRIOR TO REPAVING.
2. PLACE COMPACTED AGGREGATE BASE OR CLSM TO A MINIMUM THICKNESS OF 8 INCHES, OR THE THICKNESS OF THE AGG. BASE REMOVED, WHICHEVER IS GREATER. COMPACT AS DIRECTED.
3. CONCRETE PAVEMENT SHALL BE REPLACED WITH CONCRETE TO A MINIMUM THICKNESS OF 6 INCHES OR TO THE THICKNESS OF REMOVED CONCRETE PAVEMENT, WHICHEVER IS GREATER. SMOOTH 1" DOWEL BARS SHALL BE INSTALLED AT 6 INCHES O.C.
4. PLACE AC MIX TO A MINIMUM THICKNESS OF 4 INCHES OR THE THICKNESS OF REMOVED PAVEMENT, WHICHEVER IS GREATER COMPACT AS DIRECTED. AC PAVEMENT SHALL BE PLACED IN AT LEAST TWO 2-INCH THICK LIFTS.
5. WHERE EXISTING PCC PAVEMENT IS OVERLAYED WITH AC PAVEMENT, PLACE PCC PAVEMENT IN ACCORDANCE WITH NOTE 3 AND COVER WITH AC IN ACCORDANCE WITH NOTE 4.

1 / D1 STREET CUT DETAIL
SCALE: NTS

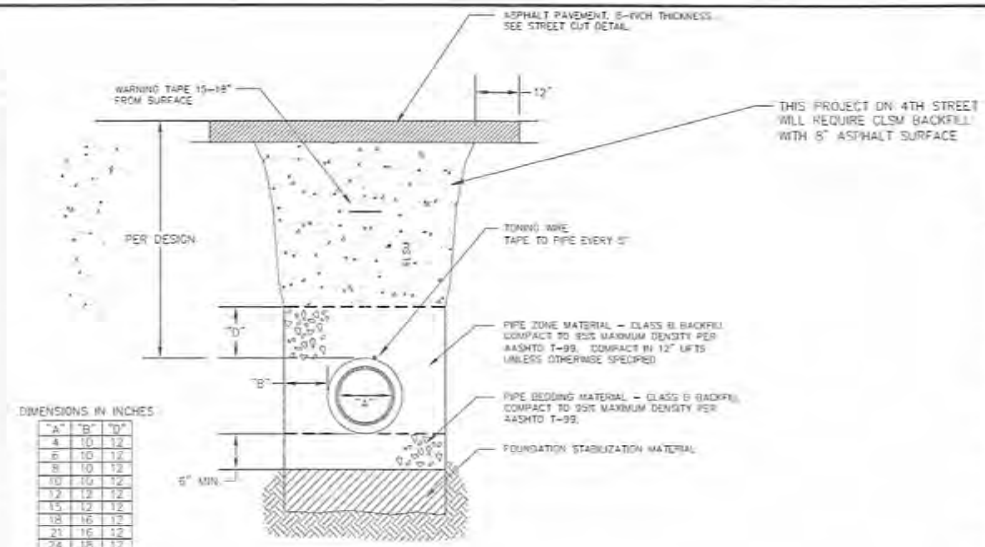

DIMENSIONS IN INCHES

"A"	"B"	"D"
4	10	12
6	10	12
8	10	12
10	10	12
12	12	12
15	12	12
18	16	12
21	16	12
24	18	12
30	18	12
36	24	14

NOTES: (SEE SPECIFICATIONS ALSO)

1. TRENCH EXCAVATION SHALL BE CONDUCTED IN A SAFE MANNER WITH ALL NECESSARY BRACING AND SHORING PROVIDED FOR COMPLIANCE WITH OSHA.
2. FOUNDATION STABILIZATION SHALL BE PROVIDED WHEN MATERIAL AT BOTTOM OF TRENCH IS UNSUITABLE IN THE OPINION OF THE CITY TO PROVIDE A STABLE TRENCH BASE. SEE SPECIFICATIONS.
3. CLASS B BACKFILL REQUIRED UNLESS OTHERWISE SPECIFIED. SEE SPECIFICATIONS AND PLAN/PROFILE DRAWINGS FOR BACKFILL LOCATIONS AND CLASSES.
4. TONING WIRE REQUIRED AT SERVICE LATERALS. WIRE SHALL BE 12 GA. MINIMUM SOLID COPPER WIRE WITH GREEN 30 MIL THICK HDPE INSULATION RATED FOR DIRECT BURY. USE APPROVED WATERPROOF SPLICE AT ALL CONNECTIONS.
5. WARNING TAPE SHALL BE 6" WIDE, 4 MIL THICK, APWA GREEN, READING "CAUTION SEWER LINE BURIED BELOW".
6. MATERIALS SHALL BE IN ACCORDANCE WITH THE CITY OF COOS BAY STANDARDS AND THESE SPECIFICATIONS.
7. COMPACT ALL FILL AS SPECIFIED.

2 / D1 TRENCH DETAIL
SCALE: NTS

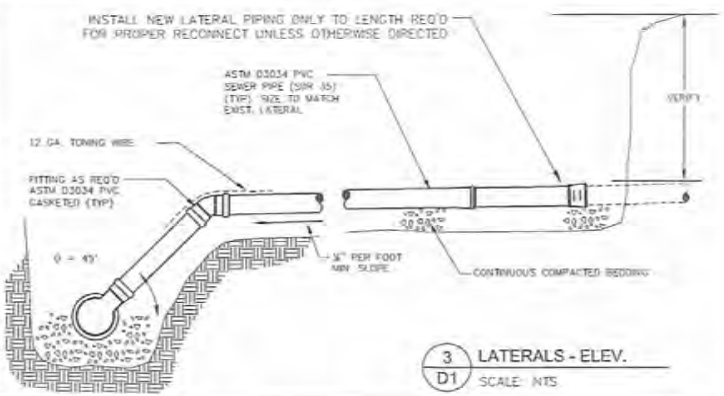

3 / D1 LATERALS - ELEV.
SCALE: NTS

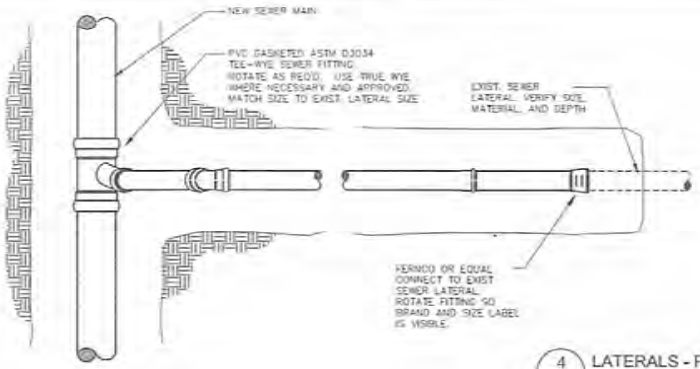

4 / D1 LATERALS - PLAN
SCALE: NTS

REGISTERED PROFESSIONAL ENGINEER 17804PE OREGON JULY 25, 1995 ROBERT E. BYNUM
RENEWS: 12/31/17

HGE INC ARCHITECTS ENGINEERS & PLANNERS
375 PARK AVE. COOS BAY, OR 97420
541.269.1166 www.hge1.com

REPRODUCTION OF THIS DRAWING IS PROHIBITED WITHOUT WRITTEN PERMISSION BY HGE INC. ARCHITECTS

REV.	DATE	DESCRIPTION	BY

Designed By: REB | Drawn By: RCB | Checked By: GRC
Project No: 15-03

CITY OF COOS BAY
COOS COUNTY, OREGON

N. 4TH STREET
STORM SEWER IMPROVEMENTS

STANDARD DETAILS
TRENCH, LATERALS

Dwg. Sheet No. D1

3/21/2016

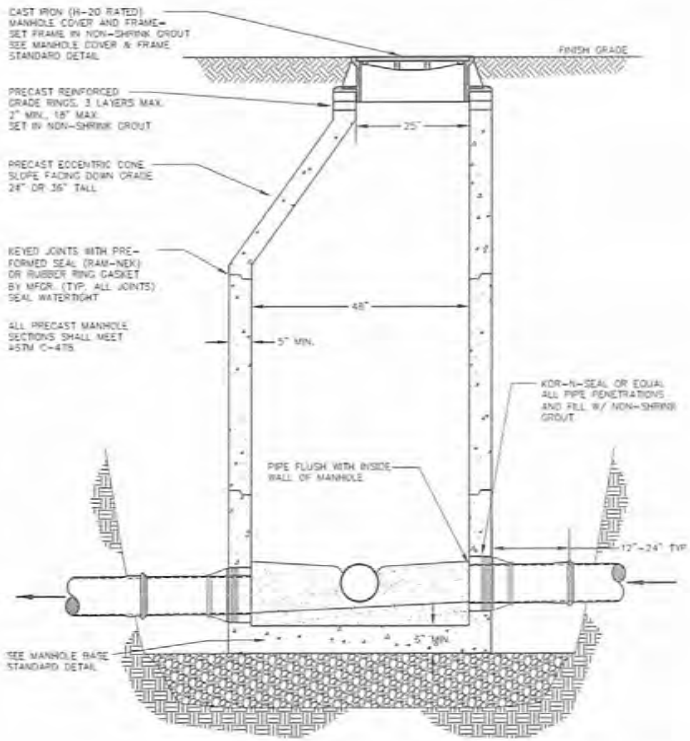

1 D2 MANHOLE DETAIL
SCALE: NTS

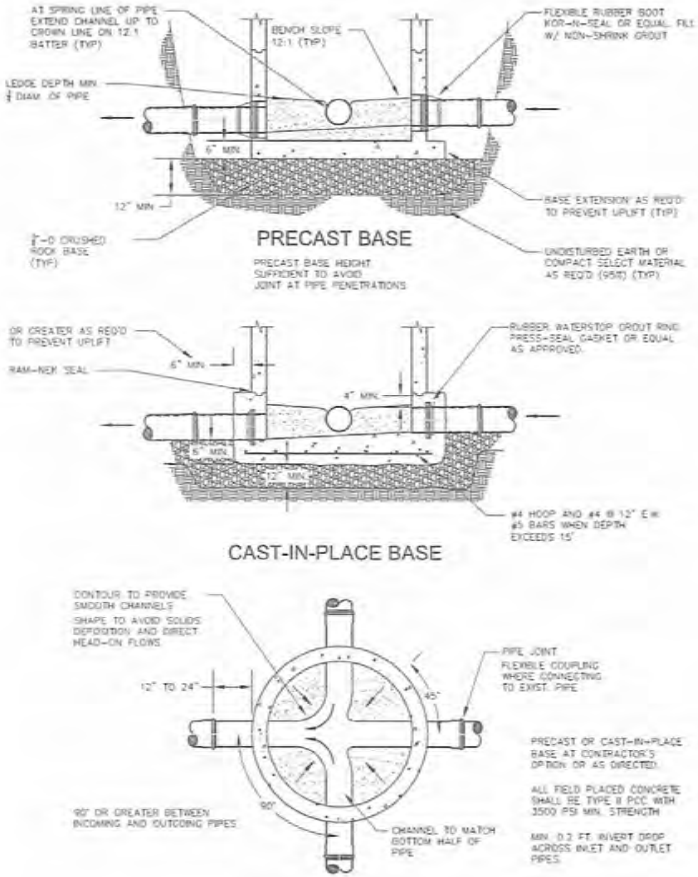

2 D2 MANHOLE BASE DETAIL
SCALE: NTS

REGISTERED PROFESSIONAL ENGINEER
17804PE
OREGON
JULY 25, 1995
ROBERT E. BYNUM
RENEWS: 12/31/17

HGE INC
ARCHITECTS ENGINEERS & PLANNERS
375 PARK AVE. COOS BAY, OR 97420
541.269.1166 www.hge1.com

REPRODUCTION OF THESE DRAWINGS IN WHOLE OR IN PART FOR ANY REASON WITHOUT PRIOR WRITTEN PERMISSION IS STRICTLY PROHIBITED.

REV	DATE	DESCRIPTION	BY

Designed By: REB Drawn By: REB Checked By: DRC
Project No: 15.60

CITY OF COOS BAY
COOS COUNTY, OREGON

N. 4TH STREET
STORM SEWER IMPROVEMENTS

STANDARD DETAILS
MANHOLES

Sheet No. D2
Date 3/21/2016

Agenda Item #8

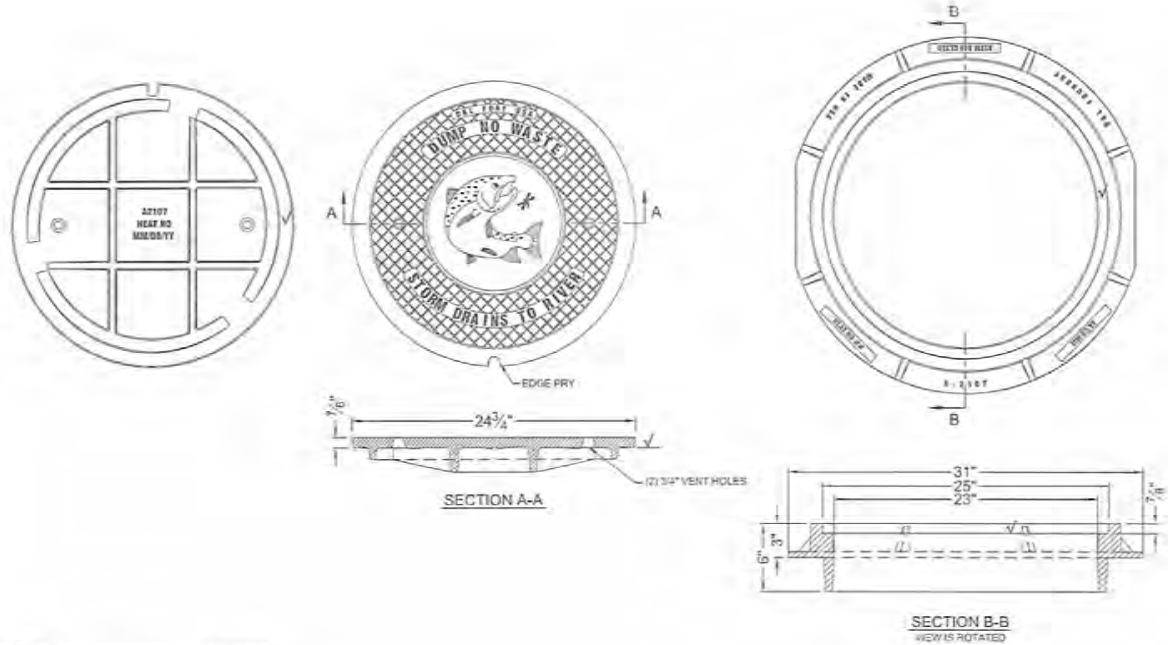

1 / D3 STORM MANHOLE COVER
SCALE: NTS

USE THIS COVER FOR ALL NEW STORM MANHOLES (3 INCLUDING MH WITH SS PASS-THROUGH).

ALSO USE THIS COVER TO REPLACE EXISTING COVER ON STORM MH 26CC-20S IF MH NOT REPLACED UNDER ALTERNATE BID B.

REGISTERED PROFESSIONAL ENGINEER
17804PE
OREGON
JULY 25, 1995
ROBERT E. BYNUM
RENEWS: 12/31/17

HGE INC
ARCHITECTS ENGINEERS & PLANNERS
375 PARK AVE. COOS BAY, OR 97420
541.269.1166 www.hge1.com

NO.	DATE	DESCRIPTION	BY

CITY OF COOS BAY
COOS COUNTY, OREGON
N. 4TH STREET
STORM SEWER IMPROVEMENTS
STANDARD DETAILS
STORM MANHOLE COVER

D3
3/21/2016

Agenda Item #8